www.Industrytechstore.com

Terminal boxes
Series G150

12779E00

- Enclosure made from brush finished stainless steel 1.4301 (AISI 304) or 1.4404 (AISI 316L)
- With a choice of hinges, cam lock or screw-on cover
- Hinged versions with wide opening angle of 130°
- Withstands a wider range of ambient temperatures due to high-quality sealing materials
- Protection channel that runs around the edge to prevent the ingress of water
- M8 external earth connection
- Flange plate that can be screwed on from the outside for easy installation
- IP66 degree of protection

www.stahl.de

WebCode G150A

Advantages of the G150 series

12660E00

The new shape of the drainage edge allows quick water drainage and prevents standing water from accumulating around the seal.
This solution helps to increase the safety inside the enclosure.

13128E00

The flange plate mounted from the outside is another advantage of this enclosure:
This guarantees perfect accessibility - even if the cables are already installed.

13130E00

The large opening angle provides convenient access and enables easy and fast work.

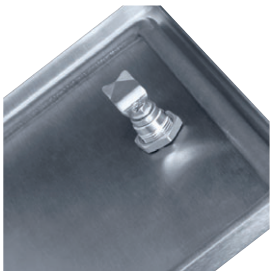

12659E00

If regular access to the enclosure is required, the version equipped with a cam lock (or a hinge) is recommended.

13129E00

The M8 earth connection is already included in the delivery.
In addition, there are different mounting possibilities.

Advantages of the G150 series

16639E00

The locking device is used to lock the cam locks by way of a padlock. These can be easily mounted and retrofitted.

16636E00

Enclosures that are opened from the top must be equipped with a cover support. This makes it possible to hold the enclosure cover open in different positions.

16959E00

The modular construction design of the sunroof system allows several enclosures to be covered simultaneously. This sunroof system can be retrofitted at any time. The bayonet suspension system enables quick and easy mounting.

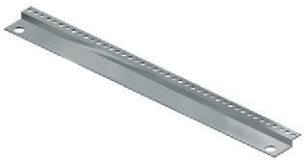

17721E00

The terminal box is optionally available with interior construction on Z rails or mounting rails made from 1.4404 stainless steel (AISI316L).

17812E00

17813E00

Label holder support for subsequent retrofitting of labels. The label holder is available on request, allowing easier on-site mounting of labels. The label holder is available in various sizes.

Order number supplement

G150/1-....-....-...-....	Not the Ex version		
G150/1-**....**-....-...-....	Dimensions of side C/D	Without hinge	With hinge
G150/1-....-**....**-...-....	Dimensions of side A/B	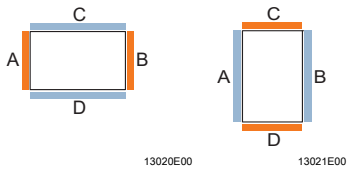	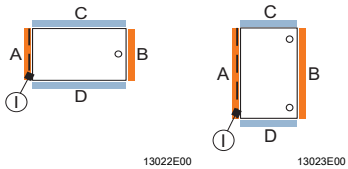 I = hinge
G150/1-....-....-091-....	Depth 91 mm		
G150/1-....-....-150-....	Depth 150 mm		
G150/1-....-....-190-....	Depth 190 mm		
G150/1-....-....-230-....	Depth 230 mm		
G150/1-....-....-...-2...	1.4301 stainless steel		
G150/1-....-....-...-3...	Stainless steel 1.4404		
G150/1-....-....-...-.3..	Brushed (line pattern)		
G150/1-....-....-...-..1.	Cover fixed with screws		
G150/1-....-....-...-..2.	Cover with hinge and cam lock		

Enclosure height

	91 mm G150/1-....-....-**091**-.3.1	150 mm G150/1-....-....-**150**-.3.1	190 mm G150/1-....-....-**190**-.3.1	230 mm G150/1-....-....-**230**-.3.1	With hinge
G150/1-0116-0116-**...**-.311	x				
G150/1-0176-0116-**...**-.311	x				
G150/1-0176-0176-**...**-.311	x				
G150/1-0236-0176-**...**-.311	x	x			
G150/1-0176-0236-**...**-.3.1		x			x
G150/1-0300-0200-**...**-.3.1		x			x
G150/1-0200-0300-**...**-.3.1		x			x
G150/1-0360-0176-**...**-.311	x	x			
G150/1-0176-0360-**...**-.3.1		x			x
G150/1-0360-0360-**...**-.3.1	x	x	x	x[1)]	x
G150/1-0400-0300-**...**-.3.1		x[1)]		x	x
G150/1-0300-0400-**...**-.3.1		x		x	x
G150/1-0400-0400-**...**-.3.1		x[3)]		x[3)]	x
G150/1-0550-0360-**...**-.3.1				x	x
G150/1-0360-0550-**...**-.321				x[2)]	x
G150/1-0600-0400-**...**-.3.1		x[1)]		x	x
G150/1-0400-0600-**...**-.3.1		x		x	x
G150/1-0727-0360-**...**-.311	x	x	x		
G150/1-0360-0727-**...**-.321		x[2)]	x[2)]		x
G150/1-0600-0600-**...**-.3.1		x		x	x
G150/1-0787-0480-**...**-.321				x	x

x = available
[1)] = without hinge
[2)] = only with hinge
[3)] = Depth 300

Version 116 x 116 and 176 x 116 (horizontal)

Terminal box up to 35 mm²

		Max. number of terminals																				
		Wago																				
Nominal cross-section [mm²]		2.5				4									6					10		
Colour		GY	BU	PE	PE	GY	OG	BU	PE	GY	PE	GY	BU	PE	GY	BU	PE	GY	PE	GY	BU	PE
Number of conductors per terminal		2	2	2	3	2	2	2	2	4	4	3	3	3	2	2	2	3	4	2	2	2
Mounting rail placement																						
12971E00	Number of mounting rails	2001 - 1201	2001 - 1204	2001 - 1207	2001 - 1307	2002 - 1201	2002 - 1202	2002 - 1204	2002 - 1207	2002 - 1401	2002 - 1407	2002 - 1301	2002 - 1304	2002 - 1307	2004 - 1201	2004 - 1204	2004 - 1207	2004 - 1301	2004 - 1407	2006 - 1201	2006 - 1204	2006 - 1207
G150/1-0116-0116-...-.3.1	1	14	14	14	14	11	11	11	11	-	-	11	11	11	9	9	9	-	-	-	-	-
G150/1-0176-0116-...-.3.1	1	17	17	17	17	14	14	14	14	-	-	14	14	14	12	12	12	-	-	-	-	-

Note

	Order numbers for enclosures with mounting rails and PE or PA rails
Plain text information	Terminal block: Number and type
Cable entry	Number, type and installation side in enclosure
Flanges	can be installed acc. to order; please indicate the enclosure side on which they are to be equipped
Terminals	Phoenix; Weidmüller available on request
Available enclosure depths	91 mm
Terminal boxes equipped with terminals > 35 to 300 mm² on request	

Table showing the max. number of possible entries of the enclosure using cable glands from series 8161

05864E00

	W x H	without flange				Flange	
	116 x 116	A	B	C	D	A/B	C/D
D = 91 mm	M16 x 1.5	6	6	5	5	-	-
	M20 x 1.5	4	4	3	3	-	-
	M25 x 1.5	2	2	2	2	-	-
	M32 x 1.5	1	1	1	1	-	-
	M40 x 1.5	1	1	1	1	-	-
	M50 x 1.5	-	-	-	-	-	-
	M63 x 1.5	-	-	-	-	-	-

	W x H	without flange				Flange	
	176 x 116	A	B	C	D	A/B	C/D
D = 91 mm	M16 x 1.5	6	6	12	12	-	-
	M20 x 1.5	4	4	8	8	-	-
	M25 x 1.5	2	2	4	4	-	-
	M32 x 1.5	1	1	3	3	-	-
	M40 x 1.5	1	1	2	2	-	-
	M50 x 1.5	-	-	-	-	-	-
	M63 x 1.5	-	-	-	-	-	-

Dimensional Drawings (all dimensions in mm) - Subject to alterations

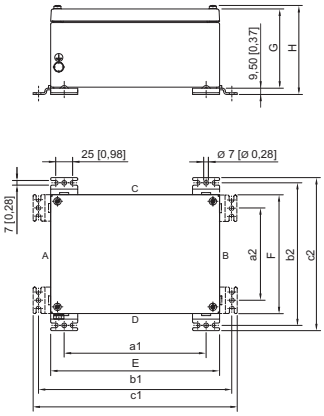

12648E00

Dimensions in mm	Depth 91 mm
a1	76
a2	76
b1	152
b2	152
c1	168
c2	168
E	116.5
F	116.5
G	91
H	106

Dimensions in mm	Depth 91 mm
a1	136
a2	76
b1	212
b2	152
c1	228
c2	168
E	176.5
F	116.5
G	91
H	106

Type G150/1-0116-0116-...-.3.1 **Type G150/1-0176-0116-091-..1.**

Version 176 x 176

Terminal box up to 35 mm²

		Max. number of terminals																				
		Wago																				
Nominal cross-section [mm²]		2.5				4									6					10		
Colour		GY	BU	PE	PE	GY	OG	BU	PE	GY	PE	GY	BU	PE	GY	BU	PE	GY	PE	GY	BU	PE
Number of conductors per terminal		2	2	2	3	2	2	2	2	4	4	3	3	3	2	2	2	3	4	2	2	2
Mounting rail placement																						
12970E00	Number of mounting rails	2001 - 1201	2001 - 1204	2001 - 1207	2001 - 1307	2002 - 1201	2002 - 1202	2002 - 1204	2002 - 1207	2002 - 1401	2002 - 1407	2002 - 1301	2002 - 1304	2002 - 1307	2004 - 1201	2004 - 1204	2004 - 1207	2004 - 1301	2004 - 1407	2006 - 1201	2006 - 1204	2006 - 1207
G150/1-0176-0176-...-.3.1	1	23	23	23	23	19	19	19	19	19	19	19	19	19	16	16	16	16	16	13	13	13

Note

	Order numbers for enclosures with mounting rails and PE or PA rails
Plain text information	Terminal block: Number and type
Cable entry	Number, type and installation side in enclosure
Flanges	can be installed acc. to order; please indicate the enclosure side on which they are to be equipped
Terminals	Phoenix; Weidmüller available on request
Available enclosure depths	91 mm
Terminal boxes equipped with terminals > 35 to 300 mm² on request	

Table showing the max. number of possible entries of the enclosure using cable glands from series 8161

05864E00

	W x H	without flange				Flange	
	176 x 176	A	B	C	D	A/B	C/D
D = 91 mm	M16 x 1.5	11	11	12	12	-	-
	M20 x 1.5	8	8	8	8	-	-
	M25 x 1.5	4	4	4	4	-	-
	M32 x 1.5	3	3	3	3	-	-
	M40 x 1.5	2	2	2	2	-	-
	M50 x 1.5	-	-	-	-	-	-
	M63 x 1.5	-	-	-	-	-	-

Dimensional Drawings (all dimensions in mm) - Subject to alterations

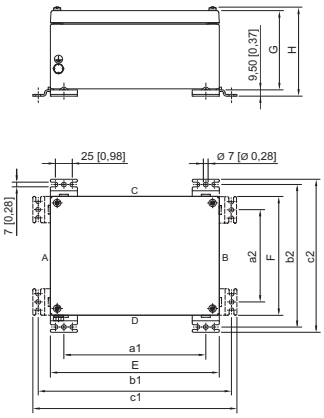

12648E00

Dimensions in mm	Depth 91 mm
a1	136
a2	136
b1	212
b2	212
c1	228
c2	228
E	176.5
F	176.5
G	91
H	106

Type G150/1-0176-0176-091-..1.

Version 236 x 176 (horizontal)

Terminal box up to 35 mm²

		Max. number of terminals																				
		Wago																				
Nominal cross-section [mm²]		2.5				4									6					10		
Colour		GY	BU	PE	PE	GY	OG	BU	PE	GY	PE	GY	BU	PE	GY	BU	PE	GY	PE	GY	BU	PE
Number of conductors per terminal		2	2	2	3	2	2	2	2	4	4	3	3	3	2	2	2	3	4	2	2	2
Mounting rail placement																						
12969E00	Number of mounting rails	2001 - 1201	2001 - 1204	2001 - 1207	2001 - 1307	2002 - 1201	2002 - 1202	2002 - 1204	2002 - 1207	2002 - 1401	2002 - 1407	2002 - 1301	2002 - 1304	2002 - 1307	2004 - 1201	2004 - 1204	2004 - 1207	2004 - 1301	2004 - 1407	2006 - 1201	2006 - 1204	2006 - 1207
G150/1-0236-0176-...-.3.1	1	37	37	37	37	27	27	27	27	27	27	27	27	27	23	23	23	23	23	21	21	21

Note

	Order numbers for enclosures with mounting rails and PE or PA rails
Plain text information	Terminal block: Number and type
Cable entry	Number, type and installation side in enclosure
Flanges	can be installed acc. to order; please indicate the enclosure side on which they are to be equipped
Terminals	Phoenix; Weidmüller available on request
Available enclosure depths	91 mm; 150 mm
Terminal boxes equipped with terminals > 35 to 300 mm² on request	

Table showing the max. number of possible entries of the enclosure using cable glands from series 8161

05864E00

	W x H	without flange				Flange	
	236 x 176	A	B	C	D	A/B	C/D
D = 91 mm	M16 x 1.5	11	11	14	14	-	4
	M20 x 1.5	8	8	11	11	-	4
	M25 x 1.5	4	4	5	5	-	2
	M32 x 1.5	3	3	4	4	-	-
	M40 x 1.5	2	2	3	3	-	-
	M50 x 1.5	-	-	-	-	-	-
	M63 x 1.5	-	-	-	-	-	-

	W x H	without flange				Flange	
	236 x 176	A	B	C	D	A/B	C/D
D = 150 mm	M16 x 1.5	28	28	41	41	9	17
	M20 x 1.5	17	17	26	26	6	10
	M25 x 1.5	10	10	16	16	4	7
	M32 x 1.5	6	6	10	10	2	5
	M40 x 1.5	4	4	6	6	1	3
	M50 x 1.5	3	3	4	4	1	2
	M63 x 1.5	2	2	2	2	-	2

Dimensional Drawings (all dimensions in mm) - Subject to alterations

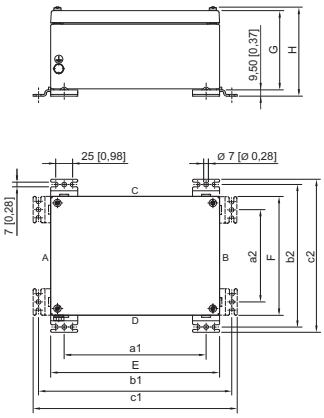

12648E00

Dimensions in mm	Depth 91 mm	150 mm
a1	196	196
a2	136	136
b1	272	272
b2	212	212
c1	288	288
c2	228	228
E	236.5	236.5
F	176.5	176.5
G	91	150
H	106	165

Type G150/1-0236-0176-091-..1. and G150/1-0236-0176-150-..1.

Version 176 x 236 (vertical)

Terminal box up to 35 mm²

		Max. number of terminals																				
		Wago																				
Nominal cross-section [mm²]		2.5				4									6					10		
Colour		GY	BU	PE	PE	GY	OG	BU	PE	GY	PE	GY	BU	PE	GY	BU	PE	GY	PE	GY	BU	PE
Number of conductors per terminal		2	2	2	3	2	2	2	2	4	4	3	3	3	2	2	2	3	4	2	2	2
Mounting rail placement																						
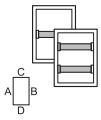 19233E00	Number of mounting rails	2001 - 1201	2001 - 1204	2001 - 1207	2001 - 1307	2002 - 1201	2002 - 1202	2002 - 1204	2002 - 1207	2002 - 1401	2002 - 1407	2002 - 1301	2002 - 1304	2002 - 1307	2004 - 1201	2004 - 1204	2004 - 1207	2004 - 1301	2004 - 1407	2006 - 1201	2006 - 1204	2006 - 1207
G150/1-0176-0236-...-.3.1	1	24	24	24	24	19	19	19	19	19	19	19	19	19	16	16	16	16	16	13	13	13
G150/1-0176-0236-...-.3.1	2	48	48	48	48	38	38	38	38	-	-	38	38	38	32	32	32	32	-	-	-	-

Note

	Order numbers for enclosures with mounting rails and PE or PA rails
Plain text information	Terminal block: Number and type
Cable entry	Number, type and installation side in enclosure
Flanges	can be installed acc. to order; please indicate the enclosure side on which they are to be equipped
Terminals	Phoenix; Weidmüller available on request
Available enclosure depths	150 mm
Terminal boxes equipped with terminals > 35 to 300 mm² on request	

Table showing the max. number of possible entries of the enclosure using cable glands from series 8161

05864E00

D = 150 mm

W x H	without flange				Flange	
176 x 236	A	B	C	D	A/B	C/D
M16 x 1.5	67	67	28	28		9
M20 x 1.5	42	42	17	17		6
M25 x 1.5	26	26	10	10		4
M32 x 1.5	19	19	6	6	a	2
M40 x 1.5	10	10	4	4		1
M50 x 1.5	6	6	3	3		1
M63 x 1.5	4	4	2	2		-

a = on request

Dimensional Drawings (all dimensions in mm) - Subject to alterations

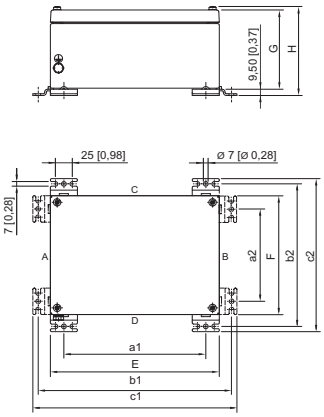

12648E00

Dimensions in mm	Depth 150 mm	150 mm*
a1	136	136
a2	196	196
b1	212	212
b2	272	272
c1	228	228
c2	288	288
E	176.5	176.5
F	236.5	236.5
G	150	150
H	165	163.5

Type G150/1-0176-0236-150-..1.
Type G150/1-0176-0236-150-..2.*

* with hinge or cam lock

Version 300 x 200 (horizontal)

Terminal box up to 35 mm²

		Max. number of terminals																				
		Wago																				
Nominal cross-section [mm²]		2.5				4									6					10		
Colour		GY	BU	PE	PE	GY	OG	BU	PE	GY	PE	GY	BU	PE	GY	BU	PE	GY	PE	GY	BU	PE
Number of conductors per terminal		2	2	2	3	2	2	2	2	4	4	3	3	3	2	2	2	3	4	2	2	2
Mounting rail placement	Number of mounting rails	2001 - 1201	2001 - 1204	2001 - 1207	2001 - 1307	2002 - 1201	2002 - 1202	2002 - 1204	2002 - 1207	2002 - 1401	2002 - 1407	2002 - 1301	2002 - 1304	2002 - 1307	2004 - 1201	2004 - 1204	2004 - 1207	2004 - 1301	2004 - 1407	2006 - 1201	2006 - 1204	2006 - 1207
G150/1-0300-0200-...-.3.1	1	54	54	54	54	43	43	43	43	43	43	43	43	43	36	36	36	36	36	30	30	30
G150/1-0300-0200-...-.3.1	2	108	108	108	-	86	86	86	86	-	-	-	-	-	72	72	72	-	-	-	-	-

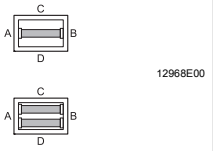

Note

	Order numbers for enclosures with mounting rails and PE or PA rails
Plain text information	Terminal block: Number and type
Cable entry	Number, type and installation side in enclosure
Flanges	can be installed acc. to order; please indicate the enclosure side on which they are to be equipped
Terminals	Phoenix; Weidmüller available on request
Available enclosure depths	150 mm
Terminal boxes equipped with terminals > 35 to 300 mm² on request	

Table showing the max. number of possible entries of the enclosure using cable glands from series 8161

05864E00

D = 150 mm

W x H	without flange				Flange	
300 x 200	A	B	C	D	A/B	C/D
M16 x 1.5	33	33	54	54	9	17
M20 x 1.5	20	20	34	34	6	10
M25 x 1.5	12	12	21	21	4	7
M32 x 1.5	7	7	16	16	2	5
M40 x 1.5	5	5	8	8	1	3
M50 x 1.5	3	3	5	5	1	2
M63 x 1.5	2	2	3	3	-	2

Dimensional Drawings (all dimensions in mm) - Subject to alterations

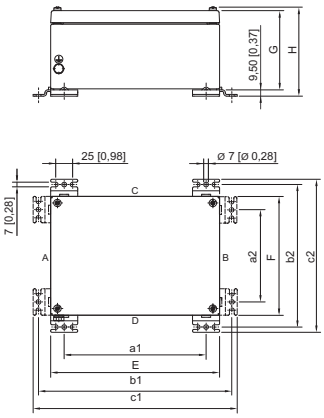

12648E00

Dimensions in mm	Depth 150 mm	150 mm*
a1	260	260
a2	160	160
b1	336	336
b2	236	236
c1	352	352
c2	252	252
E	300	300
F	200	200
G	150	150
H	165	163.5

Type G150/1-0300-0200-150-..1.
Type G150/1-0300-0200-150-..2.*

* with hinge or cam lock

Version 200 x 300 (vertical)

Terminal box up to 35 mm²

		Max. number of terminals																				
		Wago																				
Nominal cross-section [mm²]		2.5				4									6					10		
Colour		GY	BU	PE	PE	GY	OG	BU	PE	GY	PE	GY	BU	PE	GY	BU	PE	GY	PE	GY	BU	PE
Number of conductors per terminal		2	2	2	3	2	2	2	2	4	4	3	3	3	2	2	2	3	4	2	2	2
Mounting rail placement	Number of mounting rails	2001 - 1201	2001 - 1204	2001 - 1207	2001 - 1307	2002 - 1201	2002 - 1202	2002 - 1204	2002 - 1207	2002 - 1401	2002 - 1407	2002 - 1301	2002 - 1304	2002 - 1307	2004 - 1201	2004 - 1204	2004 - 1207	2004 - 1301	2004 - 1407	2006 - 1201	2006 - 1204	2006 - 1207
G150/1-0200-0300-...-.3.1	1	30	30	30	30	24	24	24	24	24	24	24	24	24	20	20	20	20	20	17	17	17
G150/1-0200-0300-...-.3.1	2	60	60	60	60	48	48	48	48	48	48	48	48	48	40	40	40	40	40	34	34	34
G150/1-0200-0300-...-.3.1	3	90	90	90	-	72	72	72	72	-	-	-	-	-	-	-	-	-	-	-	-	-

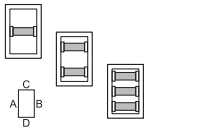

12966E00

Note

	Order numbers for enclosures with mounting rails and PE or PA rails
Plain text information	Terminal block: Number and type
Cable entry	Number, type and installation side in enclosure
Flanges	can be installed acc. to order; please indicate the enclosure side on which they are to be equipped
Terminals	Phoenix; Weidmüller available on request
Available enclosure depths	150 mm
Terminal boxes equipped with terminals > 35 to 300 mm² on request	

Table showing the max. number of possible entries of the enclosure using cable glands from series 8161

05864E00

D = 150 mm

W x H	without flange				Flange	
200 x 300	A	B	C	D	A/B	C/D
M16 x 1.5	54	54	33	33	17	9
M20 x 1.5	34	34	20	20	10	6
M25 x 1.5	21	21	12	12	7	4
M32 x 1.5	16	16	7	7	5	2
M40 x 1.5	8	8	5	5	3	1
M50 x 1.5	5	5	3	3	2	1
M63 x 1.5	3	3	2	2	2	-

Dimensional Drawings (all dimensions in mm) - Subject to alterations

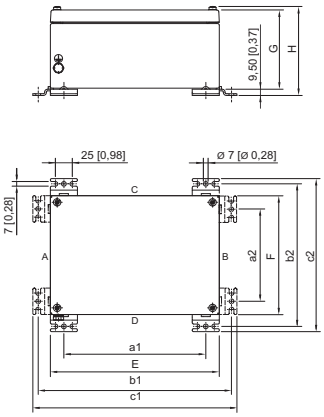

12648E00

Dimensions in mm	Depth 150 mm	150 mm*
a1	160	160
a2	260	260
b1	236	236
b2	336	336
c1	252	252
c2	352	352
E	200	200
F	300	300
G	150	150
H	165	163.5

Type G150/1-0200-0300-150-..1.
Type G150/1-0200-0300-150-..2.*

* with hinge or cam lock

Version 360 x 176 (horizontal)

Terminal box up to 35 mm²

		Max. number of terminals																				
		Wago																				
Nominal cross-section [mm²]		2.5				4									6					10		
Colour		GY	BU	PE	PE	GY	OG	BU	PE	GY	PE	GY	BU	PE	GY	BU	PE	GY	PE	GY	BU	PE
Number of conductors per terminal		2	2	2	3	2	2	2	2	4	4	3	3	3	2	2	2	3	4	2	2	2
Mounting rail placement 12965E00	Number of mounting rails	2001 - 1201	2001 - 1204	2001 - 1207	2001 - 1307	2002 - 1201	2002 - 1202	2002 - 1204	2002 - 1207	2002 - 1401	2002 - 1407	2002 - 1301	2002 - 1304	2002 - 1307	2004 - 1201	2004 - 1204	2004 - 1207	2004 - 1301	2004 - 1407	2006 - 1201	2006 - 1204	2006 - 1207
G150/1-0360-0176-...-.3.1	1	64	64	64	64	52	52	52	52	52	52	52	52	52	43	43	43	43	43	36	36	36

Note

	Order numbers for enclosures with mounting rails and PE or PA rails
Plain text information	Terminal block: Number and type
Cable entry	Number, type and installation side in enclosure
Flanges	can be installed acc. to order; please indicate the enclosure side on which they are to be equipped
Terminals	Phoenix; Weidmüller available on request
Available enclosure depths	91 mm; 150 mm
Terminal boxes equipped with terminals > 35 to 300 mm² on request	

Table showing the max. number of possible entries of the enclosure using cable glands from series 8161

05864E00

	W x H	without flange				Flange			W x H	without flange				Flange	
	360 x 176	A	B	C	D	A/B	C/D		360 x 176	A	B	C	D	A/B	C/D
D = 91 mm	M16 x 1.5	11	11	27	27	-	9	D = 150 mm	M16 x 1.5	28	28	67	67	9	28
	M20 x 1.5	8	8	20	20	-	6		M20 x 1.5	17	17	42	42	6	18
	M25 x 1.5	4	4	10	10	-	6		M25 x 1.5	10	10	26	26	4	13
	M32 x 1.5	3	3	7	7	-	-		M32 x 1.5	6	6	19	19	2	9
	M40 x 1.5	2	2	5	5	-	-		M40 x 1.5	4	4	10	10	1	5
	M50 x 1.5	-	-	-	-	-	-		M50 x 1.5	3	3	6	6	1	3
	M63 x 1.5	-	-	-	-	-	-		M63 x 1.5	2	2	4	4	-	3

Dimensional Drawings (all dimensions in mm) - Subject to alterations

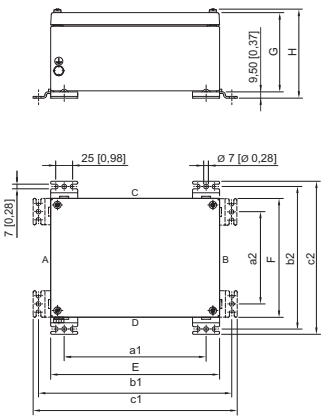

12648E00

Dimensions in mm	Depth 91 mm	150 mm
a1	320	320
a2	136	136
b1	396	396
b2	212	212
c1	412	412
c2	228	228
E	360	360
F	176.5	176.5
G	91	150
H	106	165

Type G150/1-0360-0176-091-..1. and G150/1-0360-0176-150-..1.

Version 176 x 360 (vertical)

Terminal box up to 35 mm²

		Max. number of terminals																				
		Wago																				
Nominal cross-section [mm²]		2.5				4									6					10		
Colour		GY	BU	PE	PE	GY	OG	BU	PE	GY	PE	GY	BU	PE	GY	BU	PE	GY	PE	GY	BU	PE
Number of conductors per terminal		2	2	2	3	2	2	2	2	4	4	3	3	3	2	2	2	3	4	2	2	2
Mounting rail placement																						
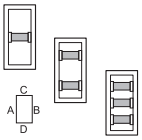	Number of mounting rails	2001 - 1201	2001 - 1204	2001 - 1207	2001 - 1307	2002 - 1201	2002 - 1202	2002 - 1204	2002 - 1207	2002 - 1401	2002 - 1407	2002 - 1301	2002 - 1304	2002 - 1307	2004 - 1201	2004 - 1204	2004 - 1207	2004 - 1301	2004 - 1407	2006 - 1201	2006 - 1204	2006 - 1207
G150/1-0176-0360-...-.3.1	1	24	24	24	24	19	19	19	19	19	19	19	19	19	16	16	16	16	16	13	13	13
G150/1-0176-0360-...-.3.1	2	48	48	48	48	38	38	38	38	38	38	38	38	38	32	32	32	32	32	26	26	26
G150/1-0176-0360-...-.3.1	3	72	72	72	72	57	57	57	57	57	57	57	57	57	48	48	48	48	-	39	39	39

12964E00

Note

	Order numbers for enclosures with mounting rails and PE or PA rails
Plain text information	Terminal block: Number and type
Cable entry	Number, type and installation side in enclosure
Flanges	can be installed acc. to order; please indicate the enclosure side on which they are to be equipped
Terminals	Phoenix; Weidmüller available on request
Available enclosure depths	150 mm
Terminal boxes equipped with terminals > 35 to 300 mm² on request	

Table showing the max. number of possible entries of the enclosure using cable glands from series 8161

05864E00

D = 150 mm

W x H	without flange				Flange	
176 x 360	A	B	C	D	A/B	C/D
M16 x 1.5	67	67	28	28	28	9
M20 x 1.5	42	42	17	17	18	6
M25 x 1.5	26	26	10	10	13	4
M32 x 1.5	19	19	6	6	9	2
M40 x 1.5	10	10	4	4	5	1
M50 x 1.5	6	6	3	3	3	1
M63 x 1.5	4	4	2	2	3	-

Dimensional Drawings (all dimensions in mm) - Subject to alterations

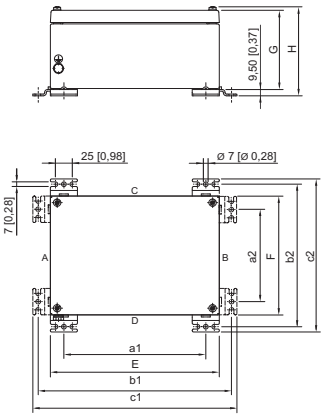

12648E00

Dimensions in mm	Depth 150 mm	150 mm*
a1	136	136
a2	320	320
b1	212	212
b2	396	396
c1	228	228
c2	412	412
E	176.5	176.5
F	360	360
G	150	150
H	165	163.5

Type G150/1-0176-0360-150-..1.
Type G150/1-0176-0360-150-..2.*

* with hinge or cam lock

Version 360 x 360

Terminal box up to 35 mm²

		Max. number of terminals																				
		Wago																				
Nominal cross-section [mm²]		2.5				4									6					10		
Colour		GY	BU	PE	PE	GY	OG	BU	PE	GY	PE	GY	BU	PE	GY	BU	PE	GY	PE	GY	BU	PE
Number of conductors per terminal		2	2	2	3	2	2	2	2	4	4	3	3	3	2	2	2	3	4	2	2	2
Mounting rail placement 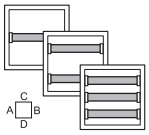	Number of mounting rails	2001 - 1201	2001 - 1204	2001 - 1207	2001 - 1307	2002 - 1201	2002 - 1202	2002 - 1204	2002 - 1207	2002 - 1401	2002 - 1407	2002 - 1301	2002 - 1304	2002 - 1307	2004 - 1201	2004 - 1204	2004 - 1207	2004 - 1301	2004 - 1407	2006 - 1201	2006 - 1204	2006 - 1207
G150/1-0360-0360-...-.3.1	1	64	64	64	64	52	52	52	52	52	52	52	52	52	43	43	43	43	43	36	36	36
G150/1-0360-0360-...-.3.1	2	128	128	128	128	104	104	104	104	104	104	104	104	104	86	86	86	86	86	72	72	72
G150/1-0360-0360-...-.3.1	3	192	192	192	192	156	156	-	-	-	-	156	156	156	129	129	129	129	-	108	108	108

Note

	Order numbers for enclosures with mounting rails and PE or PA rails
Plain text information	Terminal block: Number and type
Cable entry	Number, type and installation side in enclosure
Flanges	can be installed acc. to order; please indicate the enclosure side on which they are to be equipped
Terminals	Phoenix; Weidmüller available on request
Available enclosure depths	91 mm; 150 mm; 190 mm; 230 mm
Terminal boxes equipped with terminals > 35 to 300 mm² on request	

Table showing the max. number of possible entries of the enclosure using cable glands from series 8161

D = 91 mm

W x H	without flange				Flange	
360 x 360	A	B	C	D	A/B	C/D
M16 x 1.5	27	27	27	27	9	9
M20 x 1.5	20	20	20	20	6	6
M25 x 1.5	10	10	10	10	6	6
M32 x 1.5	7	7	7	7	-	-
M40 x 1.5	5	5	5	5	-	-
M50 x 1.5	-	-	-	-	-	-
M63 x 1.5	-	-	-	-	-	-

D = 150 mm

W x H	without flange				Flange	
360 x 360	A	B	C	D	A/B	C/D
M16 x 1.5	65	65	67	67	28	28
M20 x 1.5	42	42	42	42	18	18
M25 x 1.5	26	26	26	26	13	13
M32 x 1.5	18	18	19	19	9	9
M40 x 1.5	10	10	10	10	5	5
M50 x 1.5	6	6	6	6	3	3
M63 x 1.5	4	4	4	4	3	3

D = 190 mm

W x H	without flange				Flange	
360 x 360	A	B	C	D	A/B	C/D
M16 x 1.5	65	65	67	67	40	40
M20 x 1.5	42	42	42	42	28	28
M25 x 1.5	26	26	26	26	20	20
M32 x 1.5	18	18	19	19	12	12
M40 x 1.5	10	10	10	10	8	8
M50 x 1.5	6	6	6	6	6	6
M63 x 1.5	4	4	4	4	3	3

D = 230 mm

W x H	without flange				Flange	
360 x 360	A	B	C	D	A/B	C/D
M16 x 1.5	91	91	91	91	69	69
M20 x 1.5	59	59	59	59	44	44
M25 x 1.5	43	43	43	43	28	28
M32 x 1.5	27	27	27	27	20	20
M40 x 1.5	15	15	15	15	10	10
M50 x 1.5	9	9	9	9	8	8
M63 x 1.5	6	6	6	6	6	6

Dimensional Drawings (all dimensions in mm) - Subject to alterations

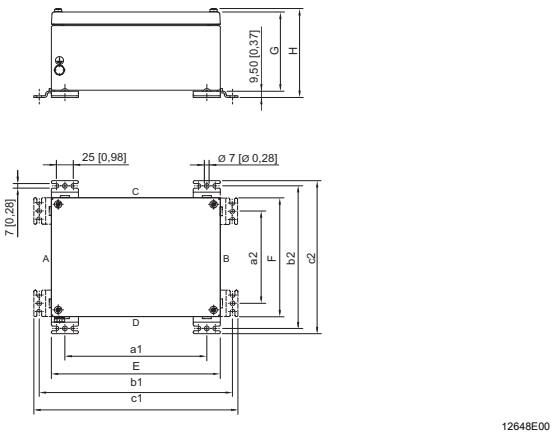

Dimen-sions in mm	Depth 91 mm	150 mm	190 mm	230 mm	91 mm*	150 mm*	190 mm*
a1	320	320	320	320	320	320	320
a2	320	320	320	320	320	320	320
b1	396	396	396	396	396	396	396
b2	396	396	396	396	396	396	396
c1	412	412	412	412	412	412	412
c2	412	412	412	412	412	412	412
E	360	360	360	360	360	360	360
F	360	360	360	360	360	360	360
G	91	150	190	230	91	150	190
H	106	165	205	245	104.5	163.5	203.5

* with hinge or cam lock

Type G150/1-0360-0360-091-..1., G150/1-0360-0360-150-..1., G150/1-0360-0360-190-..1. and G150/1-0360-0360-230-..1.
Type G150/1-0360-0360-091-..2.*, G150/1-0360-0360-150-..2.* and G150/1-0360-0360-190-..2.*

Version 400 x 300 (horizontal)

Terminal box up to 35 mm²

		Max. number of terminals																				
		Wago																				
Nominal cross-section [mm²]		2.5				4									6					10		
Colour		GY	BU	PE	PE	GY	OG	BU	PE	GY	PE	GY	BU	PE	GY	BU	PE	GY	PE	GY	BU	PE
Number of conductors per terminal		2	2	2	3	2	2	2	2	4	4	3	3	3	2	2	2	3	4	2	2	2
Mounting rail placement 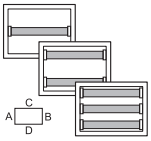 12962E00	Number of mounting rails	2001 - 1201	2001 - 1204	2001 - 1207	2001 - 1307	2002 - 1201	2002 - 1202	2002 - 1204	2002 - 1207	2002 - 1401	2002 - 1407	2002 - 1301	2002 - 1304	2002 - 1307	2004 - 1201	2004 - 1204	2004 - 1207	2004 - 1301	2004 - 1407	2006 - 1201	2006 - 1204	2006 - 1207
G150/1-0400-0300-...-.3.1	1	78	78	78	78	63	63	63	63	63	63	63	63	63	52	52	52	52	52	43	43	43
G150/1-0400-0300-...-.3.1	2	156	156	156	156	126	126	126	126	126	126	126	126	126	104	104	104	104	104	86	86	86
G150/1-0400-0300-...-.3.1	3	234	234	234	-	189	189	189	189	-	-	-	-	-	-	-	-	-	-	-	-	-

Note

	Order numbers for enclosures with mounting rails and PE or PA rails
Plain text information	Terminal block: Number and type
Cable entry	Number, type and installation side in enclosure
Flanges	can be installed acc. to order; please indicate the enclosure side on which they are to be equipped
Terminals	Phoenix; Weidmüller available on request
Available enclosure depths	150 mm; 230 mm
Terminal boxes equipped with terminals > 35 to 300 mm² on request	

Table showing the max. number of possible entries of the enclosure using cable glands from series 8161

05864E00

	W x H	without flange				Flange	
	400 x 300	A	B	C	D	A/B	C/D
D = 150 mm	M16 x 1.5	54	54	74	74	17	28
	M20 x 1.5	34	34	48	48	10	18
	M25 x 1.5	21	21	30	30	7	13
	M32 x 1.5	15	15	22	22	5	9
	M40 x 1.5	8	8	11	11	3	5
	M50 x 1.5	5	5	7	7	2	3
	M63 x 1.5	3	3	5	5	2	3

	W x H	without flange				Flange	
	400 x 300	A	B	C	D	A/B	C/D
D = 230 mm	M16 x 1.5	91	91	123	123	a	69
	M20 x 1.5	59	59	85	85		44
	M25 x 1.5	43	43	60	60		28
	M32 x 1.5	27	27	39	39		20
	M40 x 1.5	15	15	22	22		10
	M50 x 1.5	9	9	14	14		8
	M63 x 1.5	6	6	9	9		6

a = on request

Dimensional Drawings (all dimensions in mm) - Subject to alterations

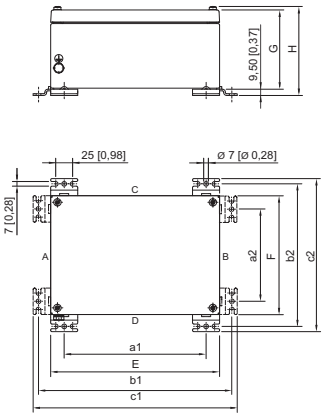

12648E00

Dimensions in mm	Depth 150 mm	230 mm	230 mm*
a1	360	360	360
a2	260	260	260
b1	436	436	436
b2	336	336	336
c1	452	452	452
c2	352	352	352
E	400	400	400
F	300	300	300
G	150	230	230
H	165	245	243.5

Type G150/1-0400-0300-150-..1. and G150/1-0400-0300-230-..1.
Type G150/1-0400-0300-230-..2.*

* with hinge or cam lock

Version 300 x 400 (vertical)

Terminal box up to 35 mm²

		Max. number of terminals																				
		Wago																				
Nominal cross-section [mm²]		2.5				4									6					10		
Colour		GY	BU	PE	PE	GY	OG	BU	PE	GY	PE	GY	BU	PE	GY	BU	PE	GY	PE	GY	BU	PE
Number of conductors per terminal		2	2	2	3	2	2	2	2	4	4	3	3	3	2	2	2	3	4	2	2	2
Mounting rail placement																						
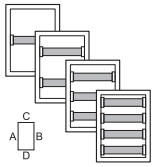	Number of mounting rails	2001 - 1201	2001 - 1204	2001 - 1207	2001 - 1307	2002 - 1201	2002 - 1202	2002 - 1204	2002 - 1207	2002 - 1401	2002 - 1407	2002 - 1301	2002 - 1304	2002 - 1307	2004 - 1201	2004 - 1204	2004 - 1207	2004 - 1301	2004 - 1407	2006 - 1201	2006 - 1204	2006 - 1207
G150/1-0300-0400-...-.3.1	1	54	54	54	54	43	43	43	43	43	43	43	43	43	36	36	36	36	36	30	30	30
G150/1-0300-0400-...-.3.1	2	108	108	108	108	86	86	86	86	86	86	86	86	86	72	72	72	72	72	60	60	60
G150/1-0300-0400-...-.3.1	3	162	162	162	162	129	129	129	129	129	129	129	129	129	108	108	108	108	108	90	90	90
G150/1-0300-0400-...-.3.1	4	216	216	216	-	172	172	172	172	-	-	-	-	-	-	-	-	-	-	-	-	-

Note

	Order numbers for enclosures with mounting rails and PE or PA rails
Plain text information	Terminal block: Number and type
Cable entry	Number, type and installation side in enclosure
Flanges	can be installed acc. to order; please indicate the enclosure side on which they are to be equipped
Terminals	Phoenix; Weidmüller available on request
Available enclosure depths	150 mm; 230 mm
Terminal boxes equipped with terminals > 35 to 300 mm² on request	

Table showing the max. number of possible entries of the enclosure using cable glands from series 8161

05864E00

	W x H	without flange				Flange	
	300 x 400	A	B	C	D	A/B	C/D
D = 150 mm	M16 x 1.5	74	74	54	54	28	17
	M20 x 1.5	48	48	34	34	18	10
	M25 x 1.5	30	30	21	21	13	7
	M32 x 1.5	22	22	15	15	9	5
	M40 x 1.5	11	11	8	8	5	3
	M50 x 1.5	7	7	5	5	3	2
	M63 x 1.5	5	5	3	3	3	2

	W x H	without flange				Flange	
	300 x 400	A	B	C	D	A/B	C/D
D = 230 mm	M16 x 1.5	123	123	91	91	69	a
	M20 x 1.5	85	85	59	59	44	
	M25 x 1.5	60	60	43	43	28	
	M32 x 1.5	39	39	27	27	20	
	M40 x 1.5	22	22	15	15	10	
	M50 x 1.5	14	14	9	9	8	
	M63 x 1.5	9	9	6	6	6	

a = on request

Dimensional Drawings (all dimensions in mm) - Subject to alterations

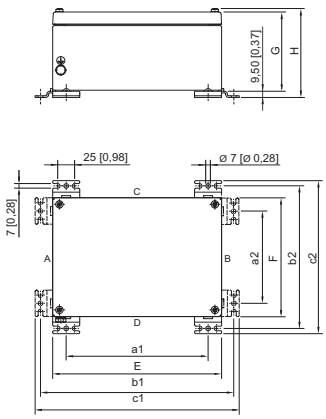

12648E00

Dimensions in mm	Depth			
	150 mm	230 mm	150 mm*	230 mm*
a1	260	260	260	260
a2	360	360	360	360
b1	336	336	336	336
b2	436	436	436	436
c1	352	352	352	352
c2	452	452	452	452
E	300	300	300	300
F	400	400	400	400
G	150	230	150	230
H	165	245	163.5	243.5

Type G150/1-0300-0400-150-..1. and G150/1-0300-0400-230-..1.
Type G150/1-0300-0400-150-..2. and G150/1-0300-0400-230-..2.*

* with hinge or cam lock

Version 400 x 400

Terminal box up to 35 mm²

		Max. number of terminals																				
		Wago																				
Nominal cross-section [mm²]		2.5				4									6					10		
Colour		GY	BU	PE	PE	GY	OG	BU	PE	GY	PE	GY	BU	PE	GY	BU	PE	GY	PE	GY	BU	PE
Number of conductors per terminal		2	2	2	3	2	2	2	2	4	4	3	3	3	2	2	2	3	4	2	2	2
Mounting rail placement 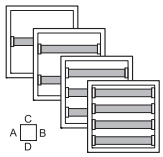 12960E00	Number of mounting rails	2001 - 1201	2001 - 1204	2001 - 1207	2001 - 1307	2002 - 1201	2002 - 1202	2002 - 1204	2002 - 1207	2002 - 1401	2002 - 1407	2002 - 1301	2002 - 1304	2002 - 1307	2004 - 1201	2004 - 1204	2004 - 1207	2004 - 1301	2004 - 1407	2006 - 1201	2006 - 1204	2006 - 1207
G150/1-0400-0400-...-.3.1	1	78	78	78	78	63	63	63	63	63	63	63	63	63	52	52	52	52	52	43	43	43
G150/1-0400-0400-...-.3.1	2	156	156	156	156	126	126	126	126	126	126	126	126	126	104	104	104	104	104	86	86	86
G150/1-0400-0400-...-.3.1	3	234	234	234	234	189	189	189	189	189	189	189	189	189	156	156	156	156	156	129	129	129
G150/1-0400-0400-...-.3.1	4	312	312	312	-	252	252	252	252	-	-	-	-	-	-	-	-	-	-	-	-	-

Note

	Order numbers for enclosures with mounting rails and PE or PA rails
Plain text information	Terminal block: Number and type
Cable entry	Number, type and installation side in enclosure
Flanges	can be installed acc. to order; please indicate the enclosure side on which they are to be equipped
Terminals	Phoenix; Weidmüller available on request
Available enclosure depths	150 mm; 230 mm
Terminal boxes equipped with terminals > 35 to 300 mm² on request	

Table showing the max. number of possible entries of the enclosure using cable glands from series 8161

05864E00

	W x H	without flange				Flange	
	400 x 400	A	B	C	D	A/B	C/D
D = 150 mm	M16 x 1.5	74	74	74	74	28	28
	M20 x 1.5	48	48	48	48	18	18
	M25 x 1.5	29	29	30	30	13	13
	M32 x 1.5	21	21	22	22	9	9
	M40 x 1.5	11	11	11	11	5	5
	M50 x 1.5	7	7	7	7	3	3
	M63 x 1.5	5	5	5	5	3	3

	W x H	without flange				Flange	
	400 x 400	A	B	C	D	A/B	C/D
D = 230 mm	M16 x 1.5	123	123	123	123	69	69
	M20 x 1.5	85	85	85	85	44	44
	M25 x 1.5	59	59	60	60	28	28
	M32 x 1.5	38	38	39	39	20	20
	M40 x 1.5	22	22	22	22	10	10
	M50 x 1.5	14	14	14	14	8	8
	M63 x 1.5	9	9	9	9	6	6

Dimensional Drawings (all dimensions in mm) - Subject to alterations

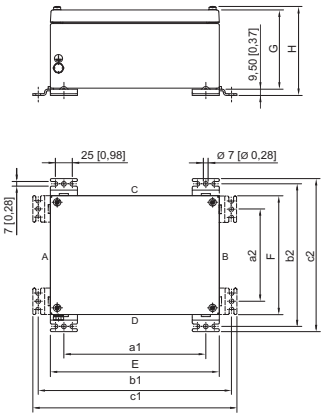

12648E00

Dimensions in mm	Depth			
	150 mm	230 mm	150 mm*	230 mm*
a1	360	360	360	360
a2	360	360	360	360
b1	436	436	436	436
b2	436	436	436	436
c1	452	452	452	452
c2	452	452	452	452
E	400	400	400	400
F	400	400	400	400
G	150	230	150	230
H	165	245	163.5	243.5

Type G150/1-0400-0400-150-..1. and G150/1-0400-0400-230-..1.
Type G150/1-0400-0400-150-..2. and G150/1-0400-0400-230-..2.*

* with hinge or cam lock

Version 550 x 360 (horizontal)

Terminal box up to 35 mm²

		Max. number of terminals																				
		Wago																				
Nominal cross-section [mm²]		2.5				4									6					10		
Colour		GY	BU	PE	PE	GY	OG	BU	PE	GY	PE	GY	BU	PE	GY	BU	PE	GY	PE	GY	BU	PE
Number of conductors per terminal		2	2	2	3	2	2	2	2	4	4	3	3	3	2	2	2	3	4	2	2	2
Mounting rail placement 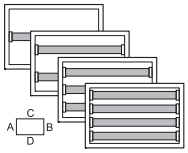 12959E00	Number of mounting rails	2001 - 1201	2001 - 1204	2001 - 1207	2001 - 1307	2002 - 1201	2002 - 1202	2002 - 1204	2002 - 1207	2002 - 1401	2002 - 1407	2002 - 1301	2002 - 1304	2002 - 1307	2004 - 1201	2004 - 1204	2004 - 1207	2004 - 1301	2004 - 1407	2006 - 1201	2006 - 1204	2006 - 1207
G150/1-0550-0360-...-.3.1	1	113	113	113	113	91	91	91	91	91	91	91	91	91	77	77	77	77	77	63	63	63
G150/1-0550-0360-...-.3.1	2	226	226	226	226	182	182	182	182	182	182	182	182	182	154	154	154	154	154	126	126	126
G150/1-0550-0360-...-.3.1	3	339	339	339	339	273	273	273	273	273	273	273	273	273	231	231	231	231	-	189	189	189
G150/1-0550-0360-...-.3.1	4	452	452	452	-	364	364	364	364	-	-	-	-	-	-	-	-	-	-	-	-	-

Note

	Order numbers for enclosures with mounting rails and PE or PA rails
Plain text information	Terminal block: Number and type
Cable entry	Number, type and installation side in enclosure
Flanges	can be installed acc. to order; please indicate the enclosure side on which they are to be equipped
Terminals	Phoenix; Weidmüller available on request
Available enclosure depths	230 mm
Terminal boxes equipped with terminals > 35 to 300 mm² on request	

Table showing the max. number of possible entries of the enclosure using cable glands from series 8161

05864E00

D = 230 mm

W x H	without flange				Flange	
550 x 360	A	B	C	D	A/B	C/D
M16 x 1.5	91	91	123	123	69	110
M20 x 1.5	59	59	85	85	44	74
M25 x 1.5	43	43	59	59	28	49
M32 x 1.5	27	27	38	38	20	31
M40 x 1.5	15	15	22	22	10	16
M50 x 1.5	9	9	14	14	8	14
M63 x 1.5	6	6	9	9	6	10

Dimensional Drawings (all dimensions in mm) - Subject to alterations

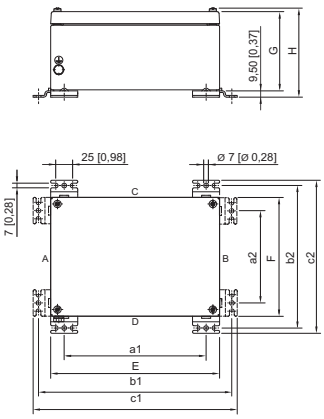

12648E00

Dimensions in mm	Depth 230 mm	230 mm*
a1	320	320
a2	510	510
b1	396	396
b2	586	586
c1	412	412
c2	602	602
E	360	360
F	550	550
G	230	230
H	245	243.5

Type G150/1-0550-0360-230-..1.
Type G150/1-0550-0360-230-..2.*

* with hinge or cam lock

Version 360 x 550 (vertical)

Terminal box up to 35 mm²

		Max. number of terminals																				
		Wago																				
Nominal cross-section [mm²]		2.5				4									6					10		
Colour		GY	BU	PE	PE	GY	OG	BU	PE	GY	PE	GY	BU	PE	GY	BU	PE	GY	PE	GY	BU	PE
Number of conductors per terminal		2	2	2	3	2	2	2	2	4	4	3	3	3	2	2	2	3	4	2	2	2
Mounting rail placement																						
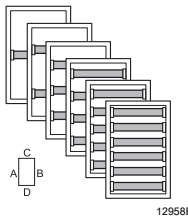	Number of mounting rails	2001 - 1201	2001 - 1204	2001 - 1207	2001 - 1307	2002 - 1201	2002 - 1202	2002 - 1204	2002 - 1207	2002 - 1401	2002 - 1407	2002 - 1301	2002 - 1304	2002 - 1307	2004 - 1201	2004 - 1204	2004 - 1207	2004 - 1301	2004 - 1407	2006 - 1201	2006 - 1204	2006 - 1207
G150/1-0360-0550-...-.3.1	1	64	64	64	64	52	52	52	52	52	52	52	52	52	43	43	43	43	43	36	36	36
G150/1-0360-0550-...-.3.1	2	128	128	128	128	104	104	104	104	104	104	104	104	104	86	86	86	86	86	72	72	72
G150/1-0360-0550-...-.3.1	3	192	192	192	192	156	156	156	156	156	156	156	156	156	129	129	129	129	129	108	108	108
G150/1-0360-0550-...-.3.1	4	256	256	256	256	208	208	208	208	208	208	208	208	208	172	172	172	172	172	144	144	144
G150/1-0360-0550-...-.3.1	5	320	320	320	320	260	260	260	260	-	-	260	260	260	215	215	215	-	-	-	-	-
G150/1-0360-0550-...-.3.1	6	384	384	384	-	312	312	312	312	-	-	-	-	-	-	-	-	-	-	-	-	-

Note

	Order numbers for enclosures with mounting rails and PE or PA rails
Plain text information	Terminal block: Number and type
Cable entry	Number, type and installation side in enclosure
Flanges	can be installed acc. to order; please indicate the enclosure side on which they are to be equipped
Terminals	Phoenix; Weidmüller available on request
Available enclosure depths	230 mm
Terminal boxes equipped with terminals > 35 to 300 mm² on request	

Table showing the max. number of possible entries of the enclosure using cable glands from series 8161

D = 230 mm

W x H	without flange				Flange	
360 x 550	A	B	C	D	A/B	C/D
M16 x 1.5	123	123	91	91	110	69
M20 x 1.5	85	85	59	59	74	44
M25 x 1.5	59	59	43	43	49	28
M32 x 1.5	38	38	27	27	31	20
M40 x 1.5	22	22	15	15	16	10
M50 x 1.5	14	14	9	9	14	8
M63 x 1.5	9	9	6	6	10	6

Dimensional Drawings (all dimensions in mm) - Subject to alterations

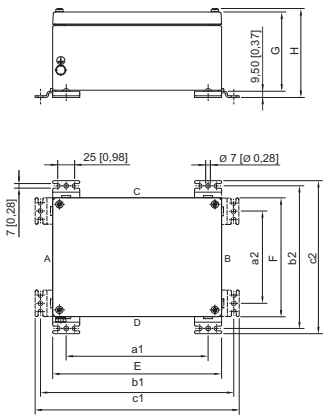

12648E00

Dimensions in mm	Depth 230 mm*
a1	320
a2	510
b1	396
b2	586
c1	412
c2	602
E	360
F	550
G	230
H	243.5

Type G150/1-0360-0550-230-..2.*

* with hinge or cam lock

E3

Version 600 x 400 (horizontal)

Terminal box up to 35 mm²

		Max. number of terminals																				
		Wago																				
Nominal cross-section [mm²]		2.5				4									6					10		
Colour		GY	BU	PE	PE	GY	OG	BU	PE	GY	PE	GY	BU	PE	GY	BU	PE	GY	PE	GY	BU	PE
Number of conductors per terminal		2	2	2	3	2	2	2	2	4	4	3	3	3	2	2	2	3	4	2	2	2
Mounting rail placement																						
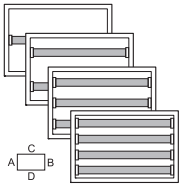	Number of mounting rails	2001 - 1201	2001 - 1204	2001 - 1207	2001 - 1307	2002 - 1201	2002 - 1202	2002 - 1204	2002 - 1207	2002 - 1401	2002 - 1407	2002 - 1301	2002 - 1304	2002 - 1307	2004 - 1201	2004 - 1204	2004 - 1207	2004 - 1301	2004 - 1407	2006 - 1201	2006 - 1204	2006 - 1207
G150/1-0600-0400-...-.3.1	1	125	125	125	125	101	101	101	101	101	101	101	101	101	85	85	85	85	85	70	70	70
G150/1-0600-0400-...-.3.1	2	250	250	250	250	202	202	202	202	202	202	202	202	202	170	170	170	170	170	140	140	140
G150/1-0600-0400-...-.3.1	3	375	375	375	375	303	303	303	303	303	303	303	303	303	255	255	255	255	255	210	210	210
G150/1-0600-0400-...-.3.1	4	500	500	500	500	404	404	404	404	-	-	-	-	-	-	-	-	-	-	-	-	-

Note

	Order numbers for enclosures with mounting rails and PE or PA rails
Plain text information	Terminal block: Number and type
Cable entry	Number, type and installation side in enclosure
Flanges	can be installed acc. to order; please indicate the enclosure side on which they are to be equipped
Terminals	Phoenix; Weidmüller available on request
Available enclosure depths	150 mm; 230 mm
Terminal boxes equipped with terminals > 35 to 300 mm² on request	

Table showing the max. number of possible entries of the enclosure using cable glands from series 8161

D = 150 mm	W x H	without flange				Flange	
	600 x 400	A	B	C	D	A/B	C/D
	M16 x 1.5	74	74	117	117	28	47
	M20 x 1.5	48	48	74	74	18	31
	M25 x 1.5	29	29	46	46	13	21
	M32 x 1.5	21	21	33	33	9	15
	M40 x 1.5	11	11	18	18	5	8
	M50 x 1.5	7	7	11	11	3	5
	M63 x 1.5	5	5	7	7	3	5

D = 230 mm	W x H	without flange				Flange	
	600 x 400	A	B	C	D	A/B	C/D
	M16 x 1.5	123	123	190	190	69	110
	M20 x 1.5	85	85	131	131	44	74
	M25 x 1.5	59	59	94	94	28	49
	M32 x 1.5	38	38	63	63	20	31
	M40 x 1.5	22	22	36	36	10	16
	M50 x 1.5	14	14	22	22	8	14
	M63 x 1.5	9	9	14	14	6	10

Dimensional Drawings (all dimensions in mm) - Subject to alterations

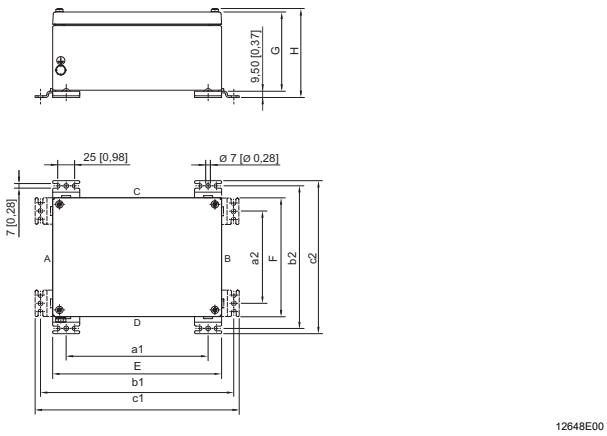

Dimensions in mm	Depth 150 mm	230 mm	230 mm*
a1	560	560	560
a2	360	360	360
b1	636	636	636
b2	436	436	436
c1	652	652	652
c2	452	452	452
E	600	600	600
F	400	400	400
G	150	230	230
H	165	245	243.5

Type G150/1-0600-0400-150-..1. and G150/1-0600-0400-230-..1.
Type G150/1-0600-0400-230-..2.*

* with hinge or cam lock

Version 400 x 600 (vertical)

Terminal box up to 35 mm²

		Max. number of terminals																				
		Wago																				
Nominal cross-section [mm²]		2.5				4									6					10		
Colour		GY	BU	PE	PE	GY	OG	BU	PE	GY	PE	GY	BU	PE	GY	BU	PE	GY	PE	GY	BU	PE
Number of conductors per terminal		2	2	2	3	2	2	2	2	4	4	3	3	3	2	2	2	3	4	2	2	2
Mounting rail placement																						
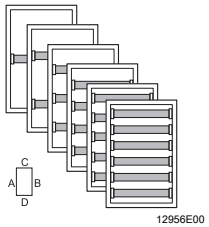	Number of mounting rails	2001 - 1201	2001 - 1204	2001 - 1207	2001 - 1307	2002 - 1201	2002 - 1202	2002 - 1204	2002 - 1207	2002 - 1401	2002 - 1407	2002 - 1301	2002 - 1304	2002 - 1307	2004 - 1201	2004 - 1204	2004 - 1207	2004 - 1301	2004 - 1407	2006 - 1201	2006 - 1204	2006 - 1207
G150/1-0400-0600-...-.3.1	1	78	78	78	78	63	63	63	63	63	63	63	63	63	52	52	52	52	52	43	43	43
G150/1-0400-0600-...-.3.1	2	156	156	156	156	126	126	126	126	126	126	126	126	126	104	104	104	104	104	86	86	86
G150/1-0400-0600-...-.3.1	3	234	234	234	234	189	189	189	189	189	189	189	189	189	156	156	156	156	156	129	129	129
G150/1-0400-0600-...-.3.1	4	312	312	312	312	252	252	252	252	252	252	252	252	252	208	208	208	208	208	172	172	172
G150/1-0400-0600-...-.3.1	5	390	390	390	390	315	315	315	315	-	-	315	315	315	260	260	260	260	-	215	215	215
G150/1-0400-0600-...-.3.1	6	468	468	468	-	378	378	378	378	-	-	-	-	-	-	-	-	-	-	-	-	-

12956E00

Note

	Order numbers for enclosures with mounting rails and PE or PA rails
Plain text information	Terminal block: Number and type
Cable entry	Number, type and installation side in enclosure
Flanges	can be installed acc. to order; please indicate the enclosure side on which they are to be equipped
Terminals	Phoenix; Weidmüller available on request
Available enclosure depths	150 mm; 230 mm
Terminal boxes equipped with terminals > 35 to 300 mm² on request	

Table showing the max. number of possible entries of the enclosure using cable glands from series 8161

05864E00

	W x H	without flange				Flange	
	400 x 600	A	B	C	D	A/B	C/D
D = 150 mm	M16 x 1.5	117	117	74	74	47	28
	M20 x 1.5	74	74	48	48	31	18
	M25 x 1.5	46	46	29	29	21	13
	M32 x 1.5	33	33	21	21	15	9
	M40 x 1.5	18	18	11	11	8	5
	M50 x 1.5	11	11	7	7	5	3
	M63 x 1.5	7	7	5	5	5	3

	W x H	without flange				Flange	
	400 x 600	A	B	C	D	A/B	C/D
D = 230 mm	M16 x 1.5	190	190	123	123	110	69
	M20 x 1.5	131	131	85	85	74	44
	M25 x 1.5	94	94	59	59	49	28
	M32 x 1.5	63	63	38	38	31	20
	M40 x 1.5	36	36	22	22	16	10
	M50 x 1.5	22	22	14	14	14	8
	M63 x 1.5	14	14	9	9	10	6

Dimensional Drawings (all dimensions in mm) - Subject to alterations

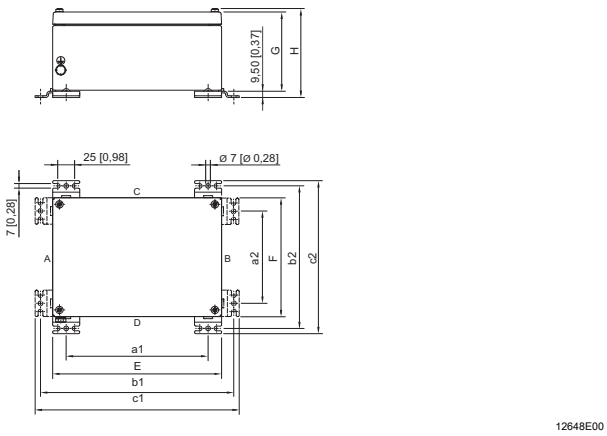

Dimensions in mm	Depth 150 mm	230 mm	150 mm*	230 mm*
a1	360	360	360	360
a2	560	560	560	560
b1	436	436	436	436
b2	636	636	636	636
c1	452	452	452	452
c2	652	652	652	652
E	400	400	400	400
F	600	600	600	600
G	150	230	150	230
H	165	245	163.5	243.5

Type G150/1-0400-0600-150-..1. and G150/1-0400-0600-230-..1.
Type G150/1-0400-0600-150-..2. and G150/1-0400-0600-230-..2.*

* with hinge or cam lock

Version 600 x 600

Terminal box up to 35 mm²

		Max. number of terminals																				
		Wago																				
Nominal cross-section [mm²]		2.5				4									6					10		
Colour		GY	BU	PE	PE	GY	OG	BU	PE	GY	PE	GY	BU	PE	GY	BU	PE	GY	PE	GY	BU	PE
Number of conductors per terminal		2	2	2	3	2	2	2	2	4	4	3	3	3	2	2	2	3	4	2	2	2
Mounting rail placement																						
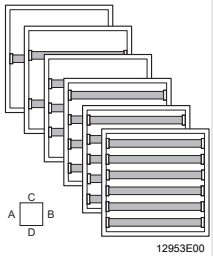	Number of mounting rails	2001 - 1201	2001 - 1204	2001 - 1207	2001 - 1307	2002 - 1201	2002 - 1202	2002 - 1204	2002 - 1207	2002 - 1401	2002 - 1407	2002 - 1301	2002 - 1304	2002 - 1307	2004 - 1201	2004 - 1204	2004 - 1207	2004 - 1301	2004 - 1407	2006 - 1201	2006 - 1204	2006 - 1207
G150/1-0600-0600-...-.3.1	1	125	125	125	125	101	101	101	101	101	101	101	101	101	85	85	85	85	85	70	70	70
G150/1-0600-0600-...-.3.1	2	250	250	250	250	202	202	202	202	202	202	202	202	202	170	170	170	170	170	140	140	140
G150/1-0600-0600-...-.3.1	3	375	375	375	375	303	303	303	303	303	303	303	303	303	255	255	255	255	255	210	210	210
G150/1-0600-0600-...-.3.1	4	500	500	500	500	404	404	404	404	404	404	404	404	404	340	340	340	340	340	280	280	280
G150/1-0600-0600-...-.3.1	5	625	625	625	625	505	505	505	505	-	-	505	505	505	425	425	425	425	425	350	350	350
G150/1-0600-0600-...-.3.1	6	750	750	750	-	606	606	606	606	-	-	-	-	-	-	-	-	-	-	-	-	-

Note

	Order numbers for enclosures with mounting rails and PE or PA rails
Plain text information	Terminal block: Number and type
Cable entry	Number, type and installation side in enclosure
Flanges	can be installed acc. to order; please indicate the enclosure side on which they are to be equipped
Terminals	Phoenix; Weidmüller available on request
Available enclosure depths	150 mm; 230 mm
Terminal boxes equipped with terminals > 35 to 300 mm² on request	

Table showing the max. number of possible entries of the enclosure using cable glands from series 8161

05864E00

	W x H	without flange				Flange	
	600 x 600	A	B	C	D	A/B	C/D
D = 150 mm	M16 x 1.5	116	116	117	117	a	a
	M20 x 1.5	73	73	74	74		
	M25 x 1.5	45	45	46	46		
	M32 x 1.5	33	33	33	33		
	M40 x 1.5	18	18	18	18		
	M50 x 1.5	11	11	11	11		
	M63 x 1.5	7	7	7	7		

	W x H	without flange				Flange	
	600 x 600	A	B	C	D	A/B	C/D
D = 230 mm	M16 x 1.5	187	187	190	190	a	a
	M20 x 1.5	130	130	131	131		
	M25 x 1.5	91	91	94	94		
	M32 x 1.5	63	63	63	63		
	M40 x 1.5	34	34	36	36		
	M50 x 1.5	22	22	22	22		
	M63 x 1.5	14	14	14	14		

Dimensional Drawings (all dimensions in mm) - Subject to alterations

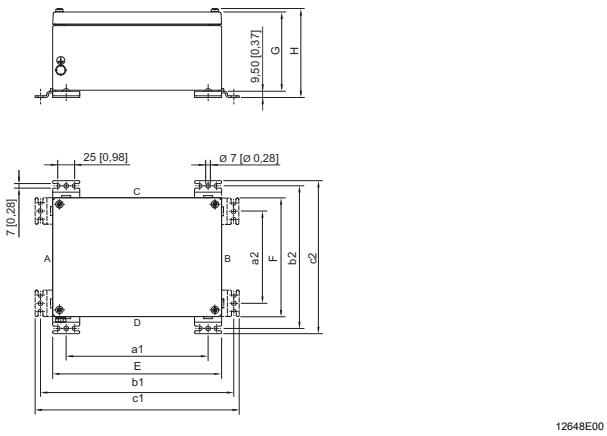

Dimensions in mm	Depth 150 mm	230 mm	150 mm*	230 mm*
a1	560	560	560	560
a2	560	560	560	560
b1	636	636	636	636
b2	636	636	636	636
c1	652	652	652	652
c2	652	652	652	652
E	600	600	600	600
F	600	600	600	600
G	150	230	150	230
H	165	245	163.5	243.5

Type G150/1-0600-0600-150-..1. and G150/1-0600-0600-230-..1.
Type G150/1-0600-0600-150-..2. and G150/1-0600-0600-230-..2.*

* with hinge or cam lock

Version 727 x 360 (horizontal)

Terminal box up to 35 mm²

		Max. number of terminals																				
		Wago																				
Nominal cross-section [mm²]		2.5				4									6					10		
Colour		GY	BU	PE	PE	GY	OG	BU	PE	GY	PE	GY	BU	PE	GY	BU	PE	GY	PE	GY	BU	PE
Number of conductors per terminal		2	2	2	3	2	2	2	2	4	4	3	3	3	2	2	2	3	4	2	2	2
Mounting rail placement																						
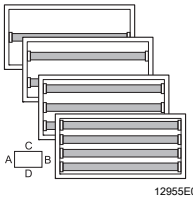	Number of mounting rails	2001 - 1201	2001 - 1204	2001 - 1207	2001 - 1307	2002 - 1201	2002 - 1202	2002 - 1204	2002 - 1207	2002 - 1401	2002 - 1407	2002 - 1301	2002 - 1304	2002 - 1307	2004 - 1201	2004 - 1204	2004 - 1207	2004 - 1301	2004 - 1407	2006 - 1201	2006 - 1204	2006 - 1207
G150/1-0727-0360-...-.3.1	1	142	142	142	142	114	114	114	114	114	114	114	114	114	96	96	96	96	96	79	79	79
G150/1-0727-0360-...-.3.1	2	284	284	284	284	228	228	228	228	228	228	228	228	228	192	192	192	192	192	158	158	158
G150/1-0727-0360-...-.3.1	3	426	426	426	426	342	342	342	342	-	-	342	342	342	288	288	288	288	-	237	237	237
G150/1-0727-0360-...-.3.1	4	568	568	568	-	-	-	-	-	-	-	-	-	-	-	-	-	-	-	-	-	-

Note

	Order numbers for enclosures with mounting rails and PE or PA rails
Plain text information	Terminal block: Number and type
Cable entry	Number, type and installation side in enclosure
Flanges	can be installed acc. to order; please indicate the enclosure side on which they are to be equipped
Terminals	Phoenix; Weidmüller available on request
Available enclosure depths	91 mm; 150 mm; 190 mm
Terminal boxes equipped with terminals > 35 to 300 mm² on request	

Table showing the max. number of possible entries of the enclosure using cable glands from series 8161

05864E00

D = 91 mm

W x H	without flange				Flange
727 x 360	A	B	C	D	
M16 x 1.5	27	27	48	48	a
M20 x 1.5	20	20	36	36	
M25 x 1.5	10	10	30	30	
M32 x 1.5	7	7	14	14	
M40 x 1.5	5	5	12	12	
M50 x 1.5	-	-	8	8	
M63 x 1.5	-	-	-	-	

D = 150 mm

W x H	without flange				Flange
727 x 360	A	B	C	D	
M16 x 1.5	65	65	117	117	a
M20 x 1.5	42	42	74	74	
M25 x 1.5	26	26	46	46	
M32 x 1.5	18	18	33	33	
M40 x 1.5	10	10	18	18	
M50 x 1.5	6	6	11	11	
M63 x 1.5	4	4	7	7	

D = 190 mm

W x H	without flange				Flange
727 x 360	A	B	C	D	
M16 x 1.5	68	68	140	140	a
M20 x 1.5	51	51	100	100	
M25 x 1.5	34	34	70	70	
M32 x 1.5	19	19	32	32	
M40 x 1.5	15	15	22	22	
M50 x 1.5	9	9	20	20	
M63 x 1.5	6	6	15	15	

a = on request

Dimensional Drawings (all dimensions in mm) - Subject to alterations

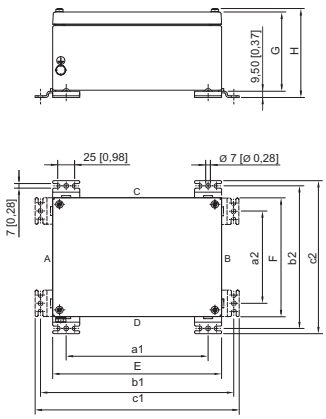

12648E00

Dimensions in mm	Depth		
	91 mm	150 mm	190 mm
a1	687	687	687
a2	320	320	320
b1	763	763	763
b2	398	398	398
c1	779	779	779
c2	412	412	412
E	727	727	727
F	360	360	360
G	91	150	190
H	106	165	205

Type G150/.-0727-0360-091-..1.
Type G150/.-0727-0360-150-..1.
Type G150/.-0727-0360-190-..1.

Version 360 x 727 (vertical)

Terminal box up to 35 mm²

		Max. number of terminals																				
		Wago																				
Nominal cross-section [mm²]		2.5				4									6					10		
Colour		GY	BU	PE	PE	GY	OG	BU	PE	GY	PE	GY	BU	PE	GY	BU	PE	GY	PE	GY	BU	PE
Number of conductors per terminal		2	2	2	3	2	2	2	2	4	4	3	3	3	2	2	2	3	4	2	2	2
Mounting rail placement																						
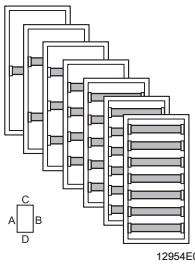	Number of mounting rails	2001 - 1201	2001 - 1204	2001 - 1207	2001 - 1307	2002 - 1201	2002 - 1202	2002 - 1204	2002 - 1207	2002 - 1401	2002 - 1407	2002 - 1301	2002 - 1304	2002 - 1307	2004 - 1201	2004 - 1204	2004 - 1207	2004 - 1301	2004 - 1407	2006 - 1201	2006 - 1204	2006 - 1207
G150/1-0360-0727-...-.3.1	1	64	64	64	64	52	52	52	52	52	52	52	52	52	43	43	43	43	43	36	36	36
G150/1-0360-0727-...-.3.1	2	128	128	128	128	104	104	104	104	104	104	104	104	104	86	86	86	86	86	72	72	72
G150/1-0360-0727-...-.3.1	3	192	192	192	192	156	156	156	156	156	156	156	156	156	129	129	129	129	129	108	108	108
G150/1-0360-0727-...-.3.1	4	256	256	256	256	208	208	208	208	208	208	208	208	208	172	172	172	172	172	144	144	144
G150/1-0360-0727-...-.3.1	5	320	320	320	320	260	260	260	260	260	260	260	260	260	215	215	215	215	215	180	180	180
G150/1-0360-0727-...-.3.1	6	384	384	384	384	312	312	312	312	312	312	312	312	312	258	258	258	258	-	216	216	216
G150/1-0360-0727-...-.3.1	7	448	448	448	448	364	364	364	364	-	-	-	-	-	301	301	301	-	-	-	-	-

12954E00

Note

	Order numbers for enclosures with mounting rails and PE or PA rails
Plain text information	Terminal block: Number and type
Cable entry	Number, type and installation side in enclosure
Flanges	can be installed acc. to order; please indicate the enclosure side on which they are to be equipped
Terminals	Phoenix; Weidmüller available on request
Available enclosure depths	150 mm; 190 mm
Terminal boxes equipped with terminals > 35 to 300 mm² on request	

Table showing the max. number of possible entries of the enclosure using cable glands from series 8161

05864E00

	W x H	without flange				Flange			W x H	without flange				Flange	
	360 x 727	A	B	C	D	A/B	C/D		360 x 727	A	B	C	D	A/B	C/D
D = 150 mm	M16 x 1.5	117	117	65	65	47	28	D = 190 mm	M16 x 1.5	a	a	67	67	a	40
	M20 x 1.5	74	74	42	42	31	18		M20 x 1.5			42	42		28
	M25 x 1.5	46	46	26	26	21	13		M25 x 1.5			26	26		20
	M32 x 1.5	33	33	18	18	15	9		M32 x 1.5			19	19		12
	M40 x 1.5	18	18	10	10	8	5		M40 x 1.5			10	10		8
	M50 x 1.5	11	11	6	6	5	3		M50 x 1.5			6	6		6
	M63 x 1.5	7	7	4	4	5	3		M63 x 1.5			4	4		3

a = on request

Dimensional Drawings (all dimensions in mm) - Subject to alterations

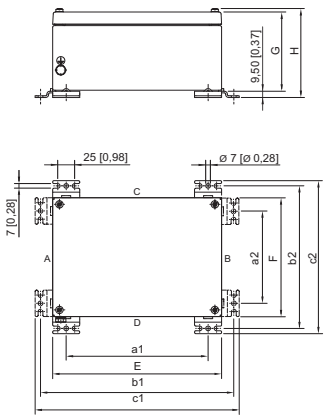

12648E00

Dimensions in mm	Depth 150 mm*	190 mm*
a1	320	320
a2	687	687
b1	398	398
b2	763	763
c1	412	412
c2	779	779
E	360	360
F	727	727
G	150	190
H	163.5	203.5

Type G150/1-0360-0727-150-..2. and G150/1-0360-0727-190-..2.*

* with hinge or cam lock

Version 787 x 480 (horizontal)

Terminal box up to 35 mm²

		Max. number of terminals																				
		Wago																				
Nominal cross-section [mm²]		2.5				4									6					10		
Colour		GY	BU	PE	PE	GY	OG	BU	PE	GY	PE	GY	BU	PE	GY	BU	PE	GY	PE	GY	BU	PE
Number of conductors per terminal		2	2	2	3	2	2	2	2	4	4	3	3	3	2	2	2	3	4	2	2	2
Mounting rail placement		2001 - 1201	2001 - 1204	2001 - 1207	2001 - 1307	2002 - 1201	2002 - 1202	2002 - 1204	2002 - 1207	2002 - 1401	2002 - 1407	2002 - 1301	2002 - 1304	2002 - 1307	2004 - 1201	2004 - 1204	2004 - 1207	2004 - 1301	2004 - 1407	2006 - 1201	2006 - 1204	2006 - 1207
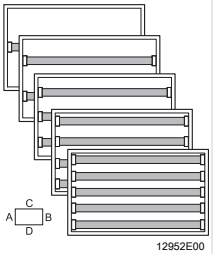	Number of mounting rails																					
G150/1-0787-0480-...-.3.1	1	170	170	170	170	137	137	137	137	137	137	137	137	137	115	115	115	115	115	95	95	95
G150/1-0787-0480-...-.3.1	2	340	340	340	340	274	274	274	274	274	274	274	274	274	230	230	230	230	230	190	190	190
G150/1-0787-0480-...-.3.1	3	510	510	510	510	411	411	411	411	411	411	411	411	411	345	345	345	345	345	285	285	285
G150/1-0787-0480-...-.3.1	4	680	680	680	680	548	548	548	548	-	-	548	548	548	460	460	460	460	-	380	380	380
G150/1-0787-0480-...-.3.1	5	850	850	850	-	-	-	-	-	-	-	-	-	-	-	-	-	-	-	-	-	-

Note

	Order numbers for enclosures with mounting rails and PE or PA rails
Plain text information	Terminal block: Number and type
Cable entry	Number, type and installation side in enclosure
Flanges	can be installed acc. to order; please indicate the enclosure side on which they are to be equipped
Terminals	Phoenix; Weidmüller available on request
Available enclosure depths	230 mm
Terminal boxes equipped with terminals > 35 to 300 mm² on request	

Table showing the max. number of possible entries of the enclosure using cable glands from series 8161

	W x H	without flange				Flange	
	787 x 480	A	B	C	D	A/B	C/D
D = 230 mm	M16 x 1.5	109	109	160	160		
	M20 x 1.5	82	82	118	118		
	M25 x 1.5	59	59	93	93	a	a
	M32 x 1.5	36	36	62	62		
	M40 x 1.5	27	27	36	36		
	M50 x 1.5	18	18	33	33		
	M63 x 1.5	10	10	18	18		

a = on request

Dimensional Drawings (all dimensions in mm) - Subject to alterations

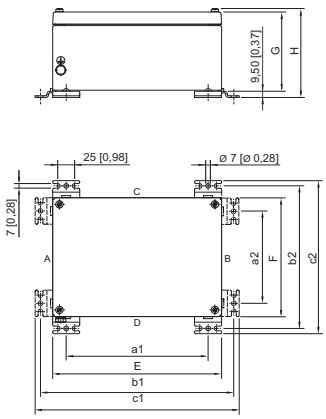

12648E00

Dimensions in mm	Depth 230 mm	230 mm*
a1	747	747
a2	440	440
b1	823	823
b2	516	516
c1	839	839
c2	532	532
E	787	787
F	480	480
G	230	230
H	245	243.5

Type G150/1-0787-0480-230-..1.
Type G150/1-0787-0480-230-..2.*

* with hinge or cam lock

Technical Data

Electrical data	
Rated operational voltage	max. 1100 V depending on the terminal type and the components used
Rated operational current	max. 630 A depending on the terminal type and the components used
Ambient conditions	
Ambient temperature	depending on the terminal type and the components used
Mechanical data	
Degree of protection	IP66 acc. to EN IEC 60529
Material	
Enclosure	stainless steel V1.4301 (AISI 304) respectively 1.4404 (AISI 316L) brush finished
Seal	Silicone, foamed
Mounting plate	sheet steel, galvanized
Cover lock	- with captive M6 stainless steel combo head screws or - with hinges / cam locks Double-bit key no. 5 for cam lock included in delivery
Flange	
Standard version	without flange
Special version	with flange
Wall thickness	
Enclosure cover	min. 2 mm
Mounting plate	3 mm
Cover screws tightening torque	4.5 Nm
Protective conductor connection	M8 blind rivet nut (1x): at the outside of the enclosure M8 rivet nut (1x): on mounting plate M6 bolt (1x): additionally on enclosures with cover hinges
Rated cross-section	max. 300 mm^2 depending on the terminal type and the components used
Note	
	please refer to the manufacturer's terminal data, e.g. the tightening torque

Accessories and spare parts

Designation	Figure	Order number	Depth	Material thickness [mm]	Material			
					Side C/D		Side A/B	
					1.4301	1.4404	1.4301	1.4404
Flange	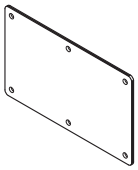 13019E00	G150/1-0176-0116-...-.3.1	91	-	-	-	-	-
		G150/1-0176-0176-...-.3.1	91	-	a	a	a	a
		G150/1-0236-0176-...-.3.1	91	3	202965	202966	a	a
				5	202967	202968	a	a
		G150/1-0300-0200-...-.3.1	150	3	a	a	202885	202886
				5	a	a	202887	202888
		G150/1-0360-0176-...-.3.1	91	3	202961	202962	a	a
				5	202963	202964	a	a
			150	3	202892	202893	202885	202886
				5	202894	202895	202887	202888
		G150/1-0360-0360-...-.3.1	91	3	202961	202962	202961	202962
				5	202963	202964	202963	202964
			150	3	202892	202893	202892	202893
				5	202894	202895	202894	202895
			190	3	a	a	a	a
				5	a	a	a	a
		G150/1-0400-0300-...-.3.1	150	3	202892	202893	a	a
				5	202894	202895	a	a
			230	3	202896	202897	a	a
				5	202898	202899	a	a
		G150/1-0400-0400-...-.3.1	150	3	202892	202893	202892	202893
				5	202894	202895	202894	202895
			230	3	202896	202897	202896	202897
				5	202898	202899	202898	202899
		G150/1-0550-0360-...-.3.1	230	3	202900	202901	202896	202897
				5	202902	202903	202898	202899
		G150/1-0600-0400-...-.3.1	230	3	202900	202901	202896	202897
				5	202902	202903	202898	202899
		G150/1-0727-0360-...-.3.1	150	3	a	a	202892	202893
				5	a	a	202894	202895
		G150/1-0600-0600-...-.3.1	150	3	202904	202905	202904	202905
				5	202906	202907	202906	202907
			230	3	202900	202901	202900	202901
				5	202902	202903	202902	202903
		G150/1-0787-0480-...-.3.1	230	3	202953	202954	202896	202897
				5	202955	202956	202898	202899
	a = on request							

We reserve the right to make alterations to the technical data, dimensions, weights, designs and products available without notice. The illustrations cannot be considered binding.

Contact: +971507924960
Email: sales@industrytechstore.com
Website: www.Industrytechstore.com